Sheet: Transformers
File: Transformers.sch
C12V +12V-C
R6.3V HR+
L6.3V HL+
N12V -12V
P12V +12V
R200V 200V RIGHT
L200V 200V LEFT
COM-ON ON-COM
LOV-ON LOV-ON
HIV-ON HIV-ON
GNDPW

Sheet: Input Switch
File: Input Switch.sch
OUTL
SC
INT-COM RC
INT-4 R4
INT-3 R3
INT-2 R2
INT-1 R1
OUTR

Sheet: Volume Control
File: Volume Control.sch
L-OUT
GND-L-OUT
L-IN
GND-L
SYS-GND
VOL_COM 1-COMMON
VOL_GND 3-GND-RELAY
VOL-1 4-K1
VOL-2 5-K2
VOL-4 7-K4
VOL-3 8-K3
VOL-6 9-K6
VOL-5 10-K5
R-OUT
GND-R-OUT
R-IN
GND-R

Sheet: Controller
File: Controller.sch
INT-COM IN_COM
INT-1 IN1
INT-2 IN2
INT-3 IN3
INT-4 IN4
VOL_COM ATT_COM
VOL-1 ATT-1DB
VOL-2 ATT-2DB
VOL-3 ATT-4DB
VOL-4 ATT-8DB
VOL-5 ATT-16DB
VOL-6 ATT-32DB
VOL_GND ATT_GND
+12V +12V-C
0V
ON_COM ON-COM
ON-R1 LOV-ON
ON-R2 HIV-ON
ON-R3 SPKR-DELAY

4 Ohm output
8 Ohm output
16 Ohm output

T1 HAMMOND_1615
T2 HAMMOND_1615
blu
yel
grn/yel
blk/yel
red
brn/yel
brn
grn
blk

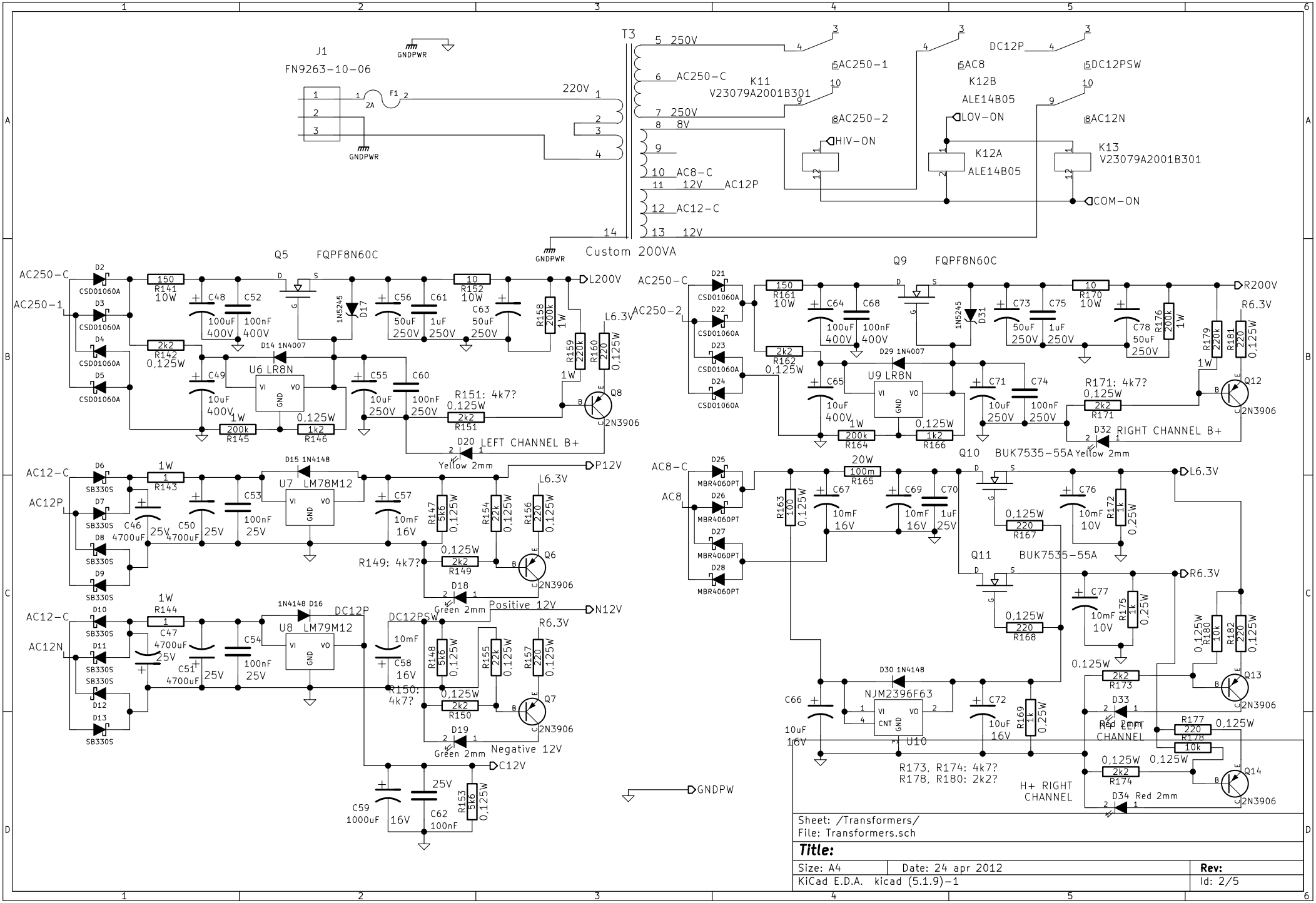
180V 7.3mA
200V LEFT
200V RIGHT
650mA
810mA
120mA
NFB-L
NFB-R
HL+
HR+
+12V
-12V
CCS-Curr
OPA2134
IRF630
10V
200V
100V
25V
16V
250V

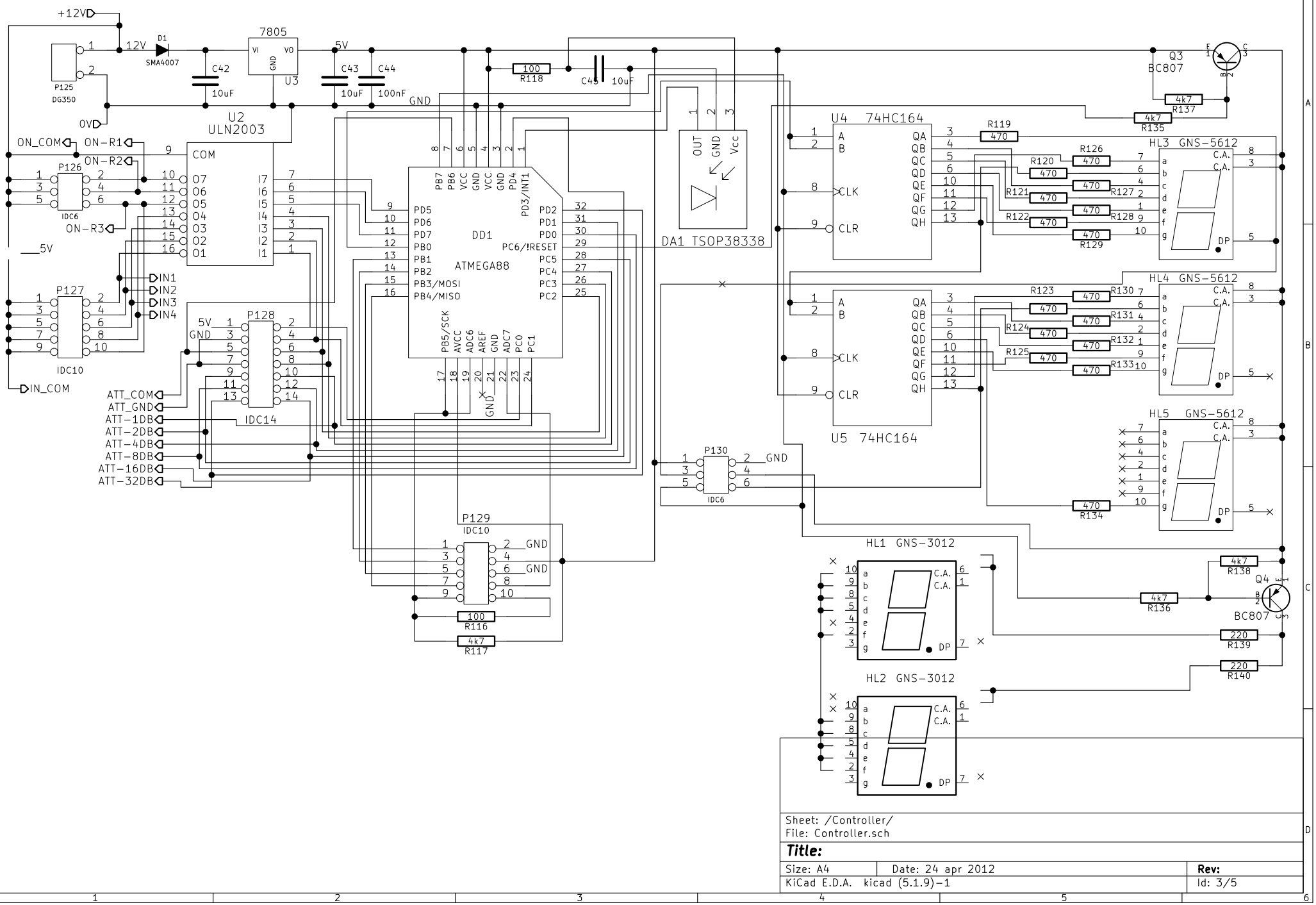
Потапов Владислав
Потапов Владислав
Потапов Владислав
001
Потапов Владислав

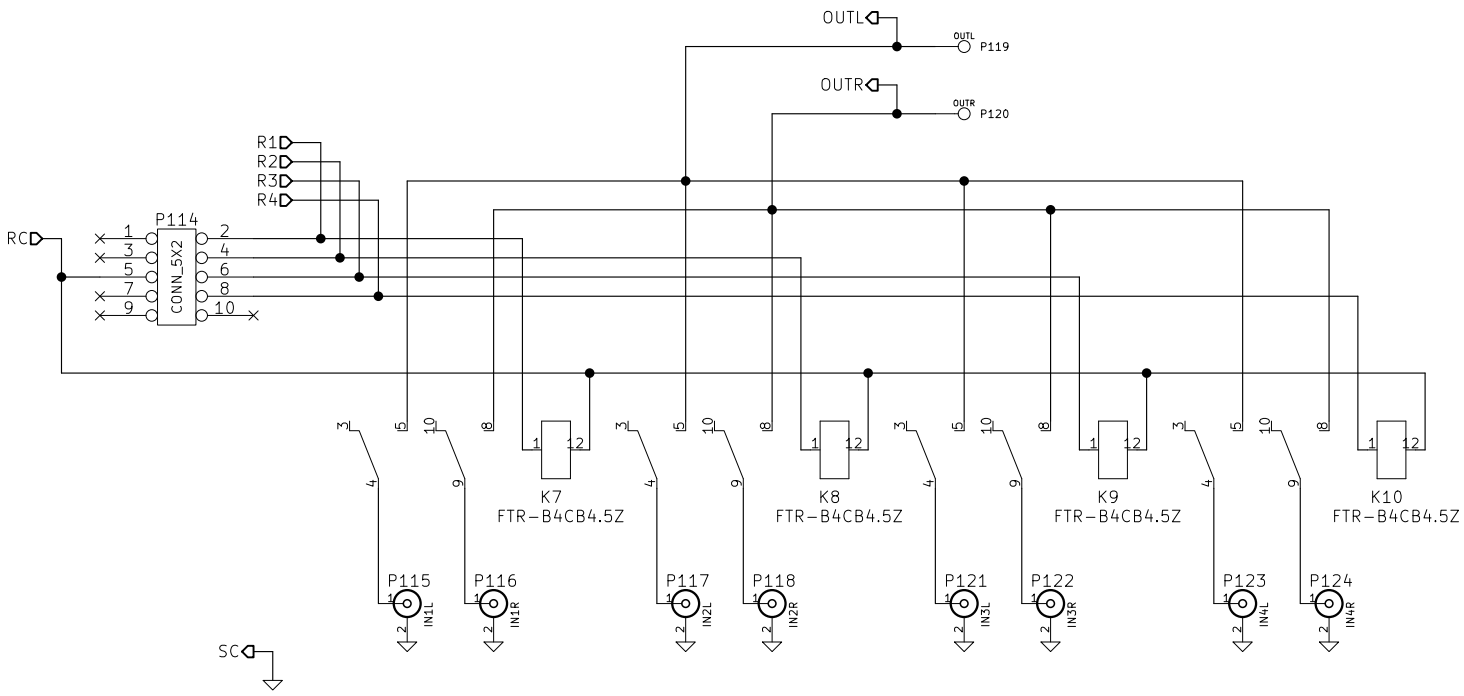
Sheet: /
File: Common schematic.sch

Title: Общая схема

Size: A3 | Date: 24 apr 2012 | **Rev: 2011050601**
KiCad E.D.A. kicad (5.1.9)-1 | Id: 1/5


J1
FN9263-10-06
GNDPWR
F1
2A
220V
T3
Custom 200VA
5 250V
6 AC250-C
7 250V
8 8V
9
10 AC8-C
11 12V AC12P
12 AC12-C
13 12V
14
K11
V23079A2001B301
AC250-1
AC250-2
HIV-ON
LOV-ON
COM-ON
DC12P
AC8
AC12N
DC12PSW
K12A
K12B
K13
ALE14B05
V23079A2001B301
Q5 FQPF8N60C
Q9 FQPF8N60C
AC250-C
AC250-1
AC250-2
CSD01060A
R141 10W
R142 0,125W
R143
R144
R145 200k
R146 1k2
R151: 4k7?
R149: 4k7?
R150: 4k7?
R161 10W
R162 0,125W
R164 200k
R166 1k2
R171: 4k7?
R173, R174: 4k7?
R178, R180: 2k2?
R152 10W
R158 200k 1W
R159 220k 1W
R160 220 0,125W
R165 20W 100m
R167 220
R168 220
R169 1k 0,25W
R170 10W
R172 1k 0,25W
R175 1k 0,25W
R176 200k 1W
R179 220k 1W
R180 10k 0,125W
R181 220 0,125W
R182 220 0,125W
C48 100uF 400V
C52 100nF 400V
C49 10uF 400V
C55 10uF 250V
C60 100nF 250V
C56 50uF 250V
C61 1uF 250V
C63 50uF 250V
C64 100uF 400V
C68 100nF 400V
C65 10uF 400V
C71 10uF 250V
C74 100nF 250V
C73 50uF 250V
C75 1uF 250V
C78 50uF 250V
C46 4700uF 25V
C50 4700uF 25V
C53 100nF 25V
C57 10mF 16V
C47 4700uF 25V
C51 4700uF 25V
C54 100nF 25V
C58 10mF 16V
C59 1000uF 16V
C62 100nF 25V
C67 10mF 16V
C69 10mF 16V
C70 1uF 25V
C76 10mF 10V
C77 10mF 10V
C66 10uF 16V
C72 10uF 16V
D14 1N4007
D29 1N4007
D30 1N4148
D15 1N4148
D16 1N4148
D17 1N5245
D31 1N5245
D18 Green 2mm
D19 Green 2mm
D20 LEFT CHANNEL B+
D32 RIGHT CHANNEL B+
D33 Red 2mm
D34 Red 2mm
U6 LR8N
U7 LM78M12
U8 LM79M12
U9 LR8N
U10 NJM2396F63
Q8 2N3906
Q6 2N3906
Q7 2N3906
Q12 2N3906
Q13 2N3906
Q14 2N3906
Q10 BUK7535-55A
Q11 BUK7535-55A
L200V
L6.3V
P12V
N12V
C12V
R200V
R6.3V
GNDPW
Positive 12V
Negative 12V
H- RIGHT CHANNEL
H+ RIGHT CHANNEL
Sheet: /Transformers/
File: Transformers.sch
Title:
Size: A4
Date: 24 apr 2012
Rev:
KiCad E.D.A. kicad (5.1.9)-1
Id: 2/5

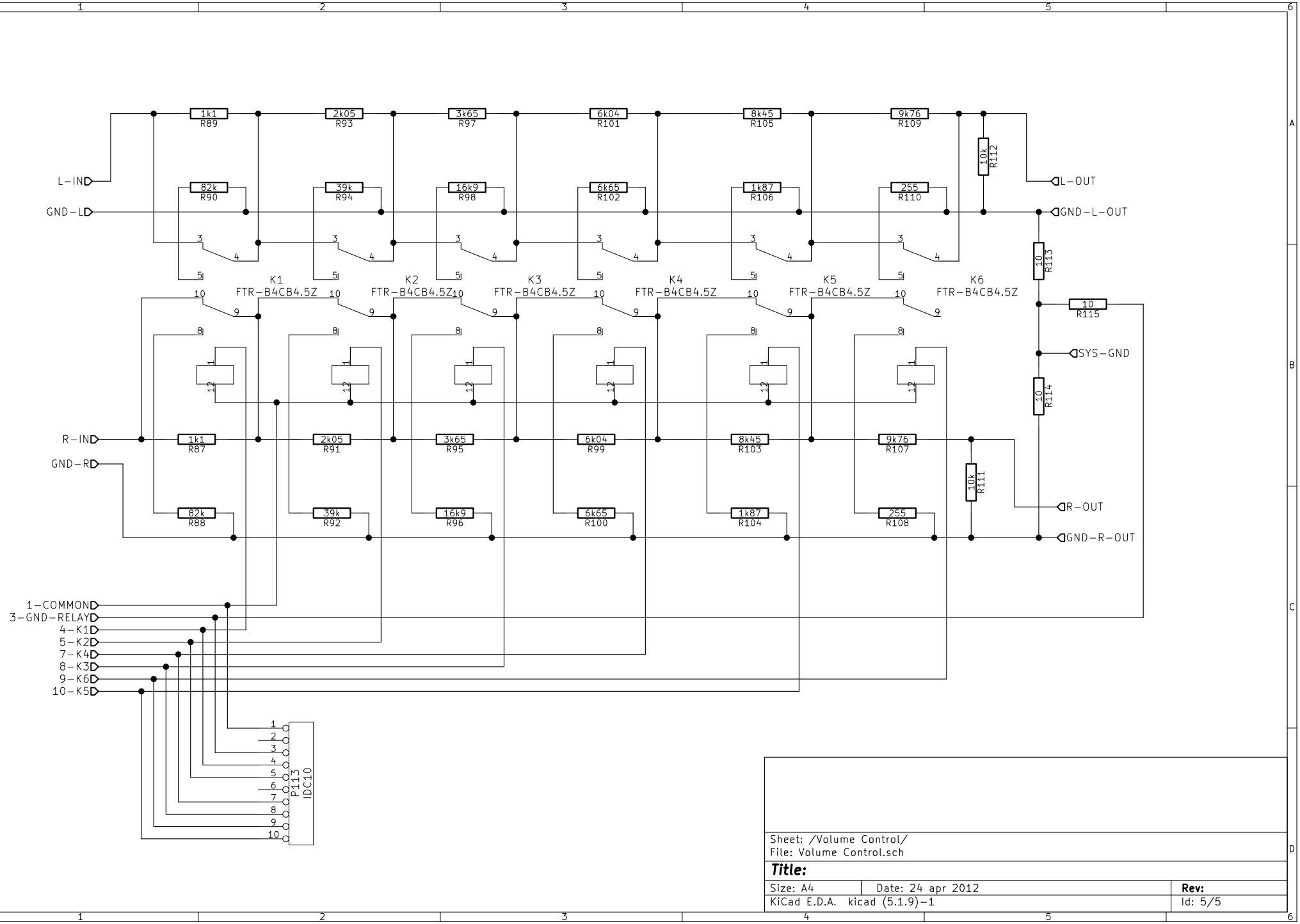

+12V
12V
D1
SMA4007
P125
DG350
C42
10uF
7805
U3
5V
C43
10uF
C44
100nF
GND
0V
U2
ULN2003
R118
100
C45
10uF
Q3
BC807
4k7
R137
4k7
R135
ON_COM
ON-R1
ON-R2
ON-R3
P126
IDC6
COM
O7
O6
O5
O4
O3
O2
O1
I7
I6
I5
I4
I3
I2
I1
5V
P127
IDC10
IN_COM
IN1
IN2
IN3
IN4
P128
IDC14
ATT_COM
ATT_GND
ATT-1DB
ATT-2DB
ATT-4DB
ATT-8DB
ATT-16DB
ATT-32DB
DD1
ATMEGA88
PB7
PB6
VCC
GND
VCC
GND
PD4
PD3/INT1
PD5
PD6
PD7
PB0
PB1
PB2
PB3/MOSI
PB4/MISO
PD2
PD1
PD0
PC6/!RESET
PC5
PC4
PC3
PC2
PB5/SCK
AVCC
ADC6
AREF
GND
ADC7
PC0
PC1
GND
DA1 TSOP38338
OUT
GND
Vcc
U4 74HC164
U5 74HC164
A
B
CLK
CLR
QA
QB
QC
QD
QE
QF
QG
QH
R119
470
R120
470
R121
470
R122
470
R126
470
R127
470
R128
470
R129
470
HL3 GNS-5612
HL4 GNS-5612
HL5 GNS-5612
C.A.
DP
R123
470
R124
470
R125
470
R130
470
R131
470
R132
470
R133
470
R134
470
P130
IDC6
GND
P129
IDC10
GND
GND
100
R116
4k7
R117
HL1 GNS-3012
HL2 GNS-3012
4k7
R138
4k7
R136
Q4
BC807
220
R139
220
R140
Sheet: /Controller/
File: Controller.sch
Title:
Size: A4
Date: 24 apr 2012
Rev:
KiCad E.D.A. kicad (5.1.9)-1
Id: 3/5



Sheet: /Input Switch/
File: Input Switch.sch

Title:

Size: A4	Date: 24 apr 2012	**Rev:**
KiCad E.D.A. kicad (5.1.9)-1		Id: 4/5



Sheet: /Volume Control/
File: Volume Control.sch

Title:

Size: A4	Date: 24 apr 2012	**Rev:**
KiCad E.D.A. kicad (5.1.9)-1		Id: 5/5